114TH CONGRESS

Accessibility Report

BIENNIAL REPORT ON AMERICANS WITH DISABILITIES ACT INSPECTIONS RELATING TO PUBLIC SERVICES AND ACCOMMODATIONS

Office of Congressional Workplace Rights

CONTENTS

03
ACCESSIBILITY PROGRAM

04
THE ADA INSPECTIONS PROCESS: BARRIER REMOVAL SURVEY APPROACH

05
114TH BIENNIAL INSPECTION RESULTS

38
FACILITY SPOTLIGHT

42
PROGRESS UPDATES

44
TRANSITION PLANS

44
INVESTIGATION OF CHARGES OF DISCRIMINATION

46
APPENDIX I: AOC 2019 PROGRESS UPDATE SUMMARY

APPENDIX II: HOUSE MEMBER OFFICE BARRIER REMOVAL PROGRESS SUMMARY

APPENDIX III: SENATE MEMBER OFFICE BARRIER REMOVAL PROGRESS SUMMARY

"Still, I am confident that we are headed in the right direction toward increased accessibility."

STATEMENT FROM THE GENERAL COUNSEL

Under the Congressional Accountability Act of 1995 (CAA), during each Congress, the General Counsel of the Office of Congressional Workplace Rights (OCWR)[1] is required to inspect legislative branch facilities for compliance with Titles II and III of the Americans with Disabilities Act (ADA).

During the 111th Congress, the OCWR Office of the General Counsel (OGC) made substantial changes to its ADA inspection program that greatly enhanced the quality and comprehensiveness of these inspections. We also worked with the Office of the Architect of the Capitol (AOC) to make the inspection program more educational by providing more interaction between our inspectors and those employees actually involved in improving accessibility, such as plumbers, elevator technicians, and construction supervisors. This has helped all concerned learn not only what the ADA standards require, but how compliance with the standards improves accessibility.

As part of the changes we implemented during the 111th Congress, we prioritized our inspections in accordance with the accessibility priorities developed by the Department of Justice (DOJ). The first priority under the DOJ guidelines is to provide access to the approaches and entrances to facilities.

During the 111th Congress, this meant focusing on the sidewalks and curb ramps throughout the Capitol Hill campus. This initial focus also coincided with the most common complaints we had received from constituents – that Capitol Hill facilities were difficult to access using the exterior pathways.

We had a considerable task in front of us given the size of the campus and the limited resources available to our office. But in the 114th Congress, we completed this task and concluded our inspections of all of the exterior routes on or surrounding all of the buildings and facilities here on the Hill.

With this multi-year project now complete, we were then able to turn our attention to the primary focus of our 114th Congress inspections – the House and Senate office buildings and the U.S. Botanic Garden.

As popular attractions for visitors to Capitol Hill and those seeking a firsthand view of the legislative process, it was critical for us to ensure these facilities were accessible to all, including individuals with disabilities.

[1] *Prior to December 21, 2018, OCWR was named the Office of Compliance (OOC).*

We found that many of the spaces most frequented by the public were accessible. The Member of Congress (Member) offices, for instance, had a relatively low number of barriers, and many of the barriers we did find were easy to correct. For example, where literature in Member office reception areas was placed either too high or too low for someone using a wheelchair to reach, the literature could simply be moved to an acceptable height on a different table or different rung on a literature rack. Similarly, if the furniture arrangement in an office made the passageway from the reception area to the meeting space too narrow for a person using a wheelchair to pass through, smaller furniture could be rearranged to widen the pathway.

Other parts of the buildings will require more attention to resolve accessibility issues. There was a higher number of barriers in other public spaces, particularly in the multi-user restrooms.

Still, I am confident that we are headed in the right direction toward increased accessibility. This is due in large part to the work we have done to educate employing offices about how to achieve accessibility.

As we identify issues, we are also providing employing offices with the information they need to achieve compliance and avoid repeat issues in the future. Employing offices now come to us for guidance and as a result, we are able to partner with them in prioritizing accessibility.

The AOC is one of our most important partners on the path to increased accessibility. At the helm of its efforts is AOC Universal Accessibility Coordinator Ben Scavone. We were pleased to highlight Ben in this report, as he has been instrumental in facilitating the removal of existing barriers and integrating accessible design into future projects.

Looking ahead to the 115th Congress, we surveyed the Capitol Visitor Center, the House and Senate cafeterias and gift shops, and the Library of Congress facilities, including the Adams, Jefferson, and Madison buildings. Based on our findings, our 115th Congress biennial ADA report will demonstrate that the trend of improved accessibility reflected here has continued.

JOHN D. UELMEN
General Counsel

ACCESSIBILITY PROGRAM

Under Section 210 of the CAA, the OGC enforces the public services and accommodations provisions found in Titles II and III of the ADA. These provisions mandate that public services and accommodations, including the facilities where these services are provided, be accessible to individuals with disabilities.

The OGC has found that educating the legislative branch community about the accessibility requirements of the ADA is one of the most effective ways to ensure that the ADA's mandates are fulfilled. From in-person training to video content to the OCWR's YourRights@Work publication series, we provide a range of resources to help employing offices learn about their obligations under the ADA. Our goal is to empower employing offices with the information they need to make their spaces accessible to individuals with disabilities. We conduct our biennial inspections of legislative branch facilities and grounds here on the Hill with that goal in mind.

Our inspections help offices identify areas where improvement is needed and help shape resources we create to support employing offices as they improve. Since the inception of our inspection program, we have seen tremendous progress in improved accessibility of the Capitol complex facilities.

This report highlights some of the most significant areas of improvement here on the Hill and summarizes the results of our 114th Congress ADA inspections.

THE ADA INSPECTIONS PROCESS: BARRIER REMOVAL SURVEY APPROACH

Since the 111th Congress, the OGC has utilized a barrier-removal survey approach to conduct its inspections, which involves: (1) identifying barriers to access, as measured against the 2010 ADA Standards for Accessible Design (Standards); (2) assessing the severity of each barrier to quantify the need for removal; and (3) evaluating potential solutions to the barriers based upon cost and need. To maximize resources, each biennial inspection focuses on specific facilities or grounds.

During the 114th Congress, the OGC continued its contractual relationship with Evan Terry Associates, P.C. to utilize its ADA survey software to effectuate the barrier-removal survey approach on the Capitol Hill campus.

Individual barriers are assigned a severity code of either A, B, C, or D. These codes signify how much the barrier deviates from the 2010 Standards and the relative impact of this deviation on individuals with a disability.

ADA BARRIER SEVERITY CODES

A	Safety Consideration
B	Blocks Access
C	Major Inconvenience
D	Minor Inconvenience

Consistent with how ADA surveys are usually conducted for private corporations and government entities, the OCWR does not record D-coded severities in its surveys because the deviation at issue in these barriers have little impact upon accessibility. Consequently, the cost to correct the deviation usually far exceeds any benefit that would result from correcting the deviation.

In addition to the standard severity codes A-D, barriers may be assigned a severity code of G, which means that the element in question did not meet the requirements of the 2010 Standards but did meet requirements of the 1991 Standards, which, in some cases, are less strict than the former. G-coded barriers do not need to be corrected unless the element in question has been altered or replaced since the 2010 Standards became enforceable. If the element has not been altered or replaced, it qualifies for the "safe harbor" exception, and the responsible party does not need to take further action until it alters or replaces the element. The OGC still notifies employing offices of G-coded barriers identified in their facilities so that these offices can take appropriate action if there is an alteration or replacement of the element.

114TH CONGRESS BIENNIAL INSPECTION RESULTS

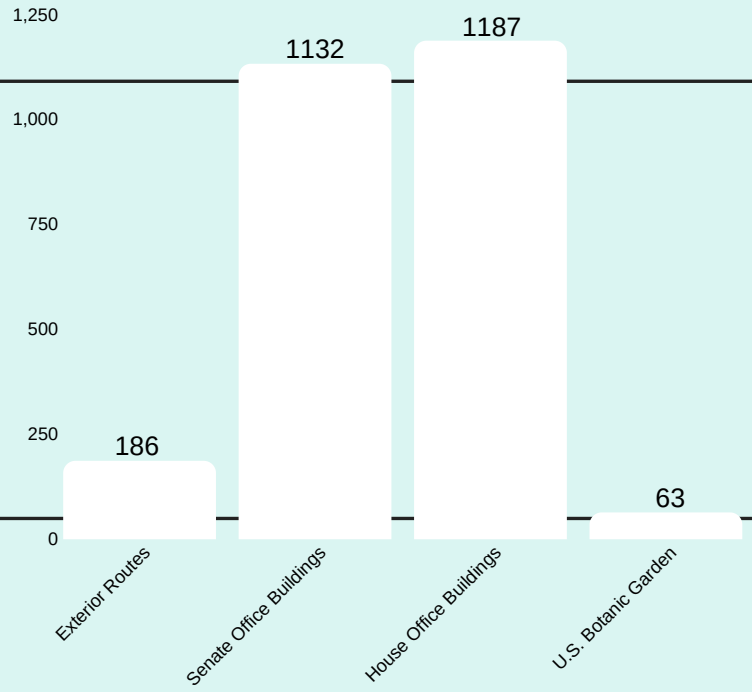

2,568

BARRIERS IDENTIFIED

OVERVIEW

During the 114th Congress, the OGC inspected over 20 facilities and grounds, with a primary focus on the House and Senate office buildings, including Member offices, and the U.S. Botanic Garden.

As a follow up to our 113th Congress ADA Biennial inspection, we also completed our exterior route inspections. Inspected routes included the exterior access routes for the Americans Veterans Disabled for Life Memorial, the Capitol, the U.S. Capitol Police Headquarters, the East and West House Underground Garages, the Senate Underground Garage, the Thomas P. O'Neill, Jr. Federal Building, the Thurgood Marshall Federal Judiciary Building, and Union Square. Within these facilities and grounds, we identified a total of 2,568 barriers to access. Most of these barriers were identified in the House and Senate office buildings.

"The OGC inspected over 20 facilities and grounds with a primary focus on the House and Senate office buildings."

BARRIER CATEGORIES

For identification purposes, we grouped the barriers into categories based on the particular type of object found to be inaccessible or the type of location where the barrier was identified, such as along an exterior route or in an elevator lobby. The three most commonly identified categories were multi-user restrooms, signage, and alarms. More than 80% of all of the barriers identified fell within one of these three categories.

BARRIER CATEGORY TOTALS

1,051 MULTI USER RESTROOMS

393 SIGNAGE

316 ALARMS

171 CURB RAMPS[2]

135 STORAGE

121 INTERIOR ROUTES

91 DOORS

72 DRINKING FOUNTAINS

57 EXTERIOR ROUTES

43 ELEVATOR LOBBIES

36 STAIRS

30 RAMPS

20 ELEVATOR CABS

13 SINGLE USER RESTROOMS

6 ATMS

5 TELEPHONES

3 TRANSPORTATION

3 PLATFORM LIFTS

2 BUSINESS & MERCANTILE

[2] *Although curb ramps are categorized separately here, these types of barriers are also considered to be a type of exterior route barrier.*

INSPECTION RESULTS BY FACILITY: EXTERIOR ROUTES

One of our most significant accomplishments during the 114th Congress ADA inspections was completing our survey of the Capitol Hill exterior routes. We started this survey nearly five years prior during the 111th Congress, when we began our current ADA inspection program.

Starting with the exterior routes was key given the feedback we received from stakeholders as we developed our inspection program. People with disabilities who were familiar with Hill facilities and offices told us how difficult it was to access offices on the Hill using the exterior pathways.

Because many Hill facilities are literally on a hill and accessing these facilities can involve steep uphill climbs, wheelchair users frequently found it difficult to traverse the steep curb cuts and the sidewalks and ramps with numerous gaps and cracks. We knew, therefore, that we could best benefit Hill visitors with disabilities by focusing our inspection resources on the exterior routes.

The vastness of the Hill campus and our limited inspection resources required us to complete our exterior route inspections in smaller sections at a time over multiple biennial inspection cycles. In the 111th Congress, we turned first to the pathways surrounding the House office buildings. We then moved on to the exterior areas of the Library of Congress and Senate facilities in the 112th Congress, and in the 113th Congress, we focused on the exterior grounds of the Capitol Building.

During the 114th Congress, we surveyed the access routes on or surrounding the American Veterans Disabled for Life Memorial, the U.S. Capitol Police Headquarters, the East and West House Underground Garages, the Senate Underground Garages, the Thomas P. O'Neill Federal Building, the Thurgood Marshall Federal Judiciary Building, and Union Square. We also completed our survey of the exterior routes immediately adjacent to the Capitol, the Dirksen Senate Office Building and the Ford House Office Building.[3]

We identified 186 barriers along these routes. Exterior route barriers included: too steep slopes and counter slopes; curb ramps that were not level with the sidewalk; curb ramps that were not wholly within the marked crossing; curb ramps with cracks, expansion joints and/or vertical transition; missing or wrong-sized landings at the top of curb ramps; curb ramp landings that were not designed to prevent water accumulation; sidewalks with too wide or too deep openings; ramps with a steep rise that did not have handrails; and missing, deteriorated or improperly colored detectable warnings.

[3] *This figure does not include the barriers we identified along the exterior route surrounding the U.S. Botanic Garden. Additional information about these barriers, including the total number of barriers identified, is included in the U.S. Botanic Garden section of this report.*

The chart in the next section shows how many barriers we identified in each of these sub-categories.

EXTERIOR ROUTE BARRIER TOTALS (186)

Slope of upper landing at curb ramp is too steep: 3
Slope of existing curb ramp side flares is too steep and/or flared sides are part of the accessible route: 9
Slope of existing curb ramp in the direction of travel is too steep: 6
Running slope of turning space at top of perpendicular curb ramp in public right-of-way is too steep: 1
Ramp slope is too steep: 1
No top landing provided at top of curb ramp: 1
Handrails are not provided at ramp where required: 1
Existing top landing is less than 36" deep and/or less than the width of the curb ramp leading to the landing (excluding flared sides): 1
Existing sidewalk and/or expansion joint has gaps that are too wide or too deep: 26
Existing curb ramp is not at the same level with sidewalk, gutter and/or street: 8
Existing curb ramp (excluding side flares) is not located wholly within marked crossing: 1
Detectable warning in public right-of-way is deteriorated or damaged: 23
Detectable warning in public right-of-way does not contrast visually with adjoining surfaces: 4
Curb ramp surface contains cracks, expansion joints and/or vertical transition: 30
Curb ramp or blended transition or pedestrian refuge island in public right-of-way does not have detectable warnings: 8
Curb ramp landing is not designed to prevent accumulation of water: 13
Cross slope of existing curb ramp (perpendicular to the direction of travel) is too steep: 7
Cross slope of accessible exterior route (perpendicular to the direction of travel) is too steep: 18
Counter slope of adjoining gutters or road surfaces immediately adjacent to curb ramp or accessible route is too steep: 21
Bottom of diagonal, or corner-type, curb ramp does not have sufficient clear space at the bottom of the ramp outside active traffic lanes of roadway: 1
Running and cross slope of accessible route is too steep: 3

INSPECTION RESULTS BY FACILITY: SENATE OFFICE BUILDINGS

During our Senate office building inspections, we surveyed the publicly accessible spaces in Dirksen, Hart, and Russell, as well as the Senate Subway Tunnel. Some of the areas of public access we inspected included entrances, elevators, Member offices, restrooms, ramps, and stairwells.

We identified a total of 1,132 barriers in the Senate office buildings: 490 were identified in Hart, 373 in Dirksen, 258 in Russell, and 11 in the Senate Subway Tunnel.

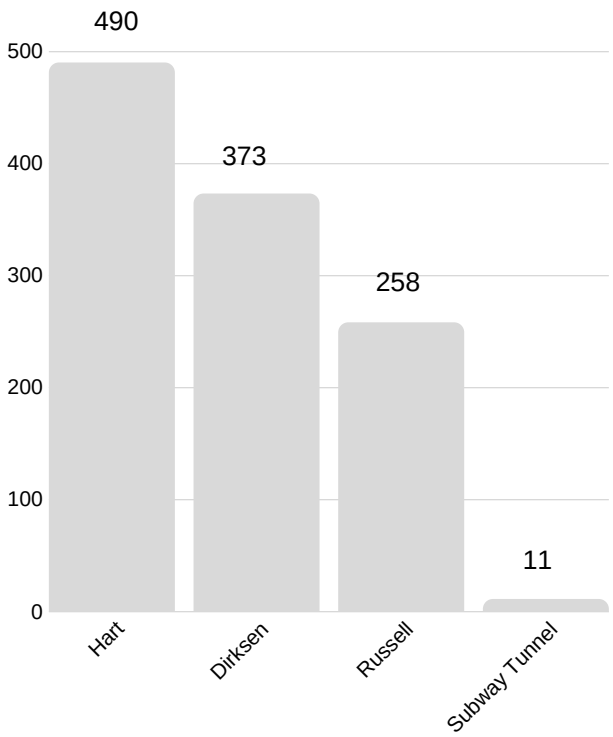

SENATE TOTAL BARRIERS

HART SENATE OFFICE BUILDING

With 490 barriers, the Hart Senate Office Building had one of the highest barrier totals of all the facilities we inspected during this Congress. Much of this total was attributable to the building's multi-user restrooms. Although the restrooms have accessible-designated stalls, certain features within the stalls, like improperly placed grab bars or out-of-reach urinal flush controls, were non-compliant and would make it more difficult for a person using a wheelchair to use the restroom independently. There were 348 multi-user restrooms barriers, which was more than 70% of all the barriers we identified in Hart.

There were significantly less barriers in other categories, such as alarms, doors, drinking fountains, elevator cabs and lobbies, interior routes, ramps and signage. We identified 92 signage barriers, and less than 20 barriers in each of the other categories.

490

HART BARRIERS

Most common barrier types:

- Multi-user restrooms
- Signage
- Drinking fountains

HART MEMBER OFFICE BARRIERS

One of the building-wide Member office issues that we saw in Hart was office and suite doors that required too much force to open and/or closed too quickly. The problem with such doors is that they are difficult to open if you are someone with limited upper body strength or an impairment that affects the use of your hands. Further, persons who use wheelchairs, walkers, or other mobility devices may not be able to pass through such doors fast enough.

Barriers related to the opening force and closing speed of doors can usually be resolved by making adjustments to the overhead door closer.

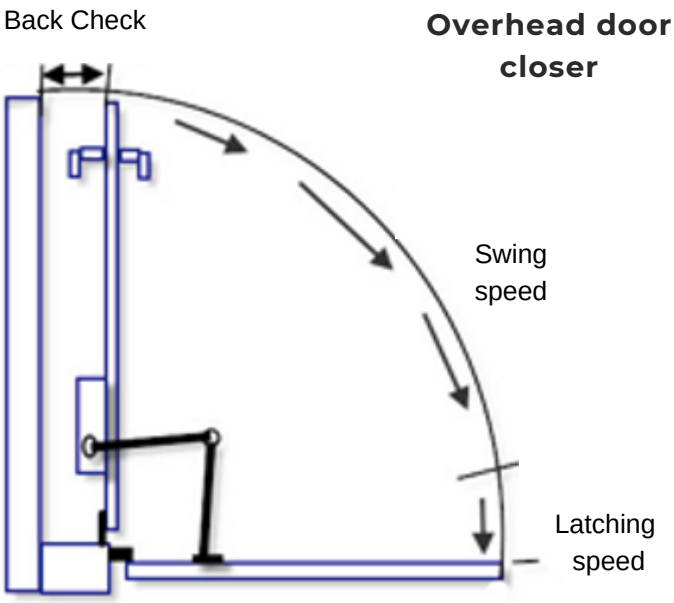

Credit: https://adata.org/factsheet/adjusting-doors-access

HART MEMBER OFFICE BARRIERS	TOTAL
Not enough knee and/or toe clearance at conference/meeting tables	3
Path for wheelchairs is too narrow	2
Office doors are too heavy to open	Whole facility

Other than the building-wide barrier associated with the doors, inspectors only identified five other barriers in Member offices in Hart. Three concerned the lack of sufficient knee and/or toe clearance at working surfaces (such as a conference table or desk) and the other two concerned too narrow pathways into conference room and meeting spaces. Both types of barriers can impede a person using a wheelchair from being able to easily navigate into an office or to pull up to and sit at the desk or table.

HART NON-OFFICE BARRIERS

The remaining spaces that we inspected, such as the public restrooms, hallways, and elevators, had many more barriers - 484 in total. The charts below provide the total in each category and describe the specific types of barriers identified.

MULTI-USER RESTROOMS (348)

Stall is not wide enough: 2
Baby changing table is outside reach range: 40
Coat hook in accessible stall is outside reach range: 10
Stall door is not self closing: 126
Power operated restroom door closes too fast: 2
Light switch for restroom is outside reach range: 2
Feminine product dispenser requires grasping, pinching, or twisting to operate: 32
Flush mechanism is on narrow side of toilet: 1
International Symbol of Accessibility sign is displayed at inaccessible restroom: 1
Maneuvering clearance on pull side of out-swinging stall door is insufficient: 1
Insufficient knee clearance at sink: 16
No visual fire alarm in restroom: 1
Receptacle outlet is outside reach range: 1
Paper towel dispenser is outside reach range: 2
Automatic or power-assisted door does not have standby power: 10
Rear grab bar is not mounted at required height: 6
Raised letter and braille sign identifying restroom is on hinge side of out-swinging door: 9
Seat cover dispenser is located outside reach range: 35
Side grab bar is in incorrect location in stall: 7
Soap dispenser is outside reach range: 2
Soap dispenser requires two hands to operate: 16
Toilet paper dispenser is not mounted in correct location in stall: 11
Clear floor space in front of urinal is insufficient: 1
Urinal or toilet seat is not at required height: 6
Manual urinal flush is outside reach range: 1
Toilet is not in required location in stall: 12

SIGNAGE (92)

Existing braille is not easily detectable by touch: 44
Existing braille is positioned incorrectly: 3
Directional sign is positioned too high with characters that are too small to read: 2
Raised letter and braille sign for exits is missing: 39
Raised letter and braille sign is obstructed: 3
Raised letter and braille sign is placed where it could be obstructed by open door: 1

DRINKING FOUNTAINS (18)

Insufficient knee clearance at the fountain: 16
Drinking fountain requires too much force to operate: 1
Water stream is too low to allow for insertion of cup: 1

ELEVATOR CABS AND LOBBIES (8)

Verbal announcement not made at each floor: 1
Five point star to indicate main level is not provided on both elevator frame jambs: 4
Floor and car designations do not provide both tactile characters and braille: 1
Raised letter and braille floor designations are provided on one jamb only: 2

DOORS (6)

Door closes too fast: 6

RAMPS (6)

Handrails are not provided: 3
Ramp slope is too steep: 3

ALARMS (3)

Fire extinguisher or fire alarm pull station is outside reach range: 2
Fire alarm pull station clear floor space is obstructed: 1

INTERIOR ROUTES (3)

Mounted or other object protrudes too far out into walkway: 3

373

DIRKSEN BARRIERS

DIRKSEN SENATE OFFICE BUILDING

We identified 373 barriers in Dirksen. Like Hart, most of the barriers in Dirksen were attributable to the multi-user restrooms. There were 273 multi-user restroom barriers, which was more than 70% of the total number of barriers we found in Dirksen.

Some of the restroom barriers included lack of maneuvering clearance at restroom compartment doors and non-compliant soap dispensers. Insufficient maneuvering clearance could prevent a person using a wheelchair from being able to get into the restroom stall. The non-compliant soap dispensers had controls or operating mechanisms that required two hands to operate. This is problematic for someone with a disability that affects their hands because they may not be able to dispense soap for themselves to wash their hands.

The remaining approximately 30% of the Dirksen barriers were attributable to the alarms, doors, drinking fountains, elevator cabs and lobbies, interior routes, signage, single user toilet rooms, and storage areas. As with Hart, a high percentage of these remaining barriers concerned the building's interior signage.

MOST COMMON BARRIER TYPES:;

- Multi-user restrooms
- Signage
- Elevator lobbies and cabs

DIRKSEN SENATE OFFICE BARRIERS

There were a relatively low number of barriers identified in the Dirksen Member offices. Inspectors found just 3 barriers and they all related to literature or magazine stands being positioned outside of the required reach range.

The reach range provisions of the Standards help ensure that persons using wheelchairs or persons with reaching difficulties are able to reach objects, such as literature on reception tables or in magazine racks in a lobby area. Under the Standards, these items must be positioned no lower than 15 inches off the floor and no higher than 48 inches off the floor.

If literature on a table or literature rack is outside the required reach range, this can be addressed by simply moving the literature (rather than the table or racks) to a location that is within the required reach range.

DIRKSEN MEMBER OFFICE BARRIERS	TOTAL
Literature on magazine rack is outside reach range	3

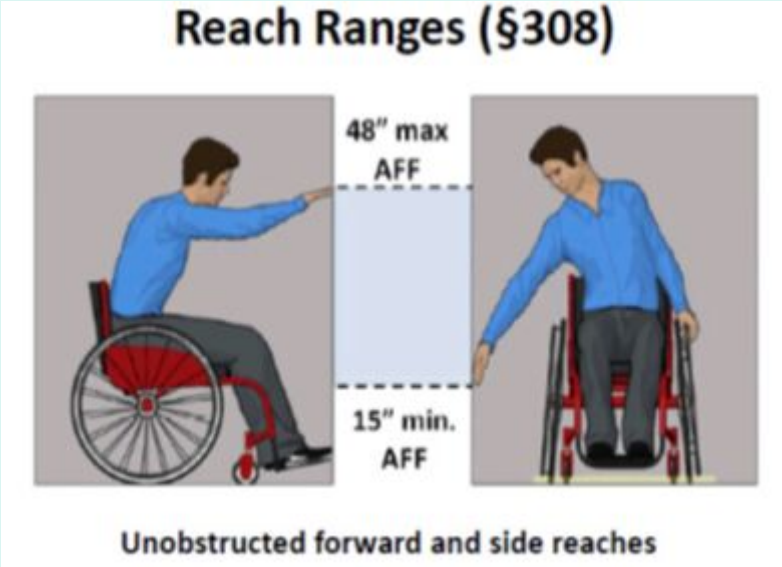

DIRKSEN NON-OFFICE BARRIERS

The barriers we identified in non-Member office spaces in Dirksen accounted for most of the Dirksen barriers. There were 370 non-Member office barriers in total. The section below provides the total in each barrier category and describes the specific types of barriers we identified.

MULTI-USER RESTROOMS (273)

Stall is not deep enough or is too wide: 2
Baby changing table is outside reach range: 4
Coat hook is outside reach range: 8
Stall door is not self-closing: 22
Stall door does not have door pull: 44
Stall obstructed by trash can: 1
Feminine product dispenser requires pinching to operate: 22
Knee clearance at sink is insufficient: 14
Bathroom mirror is mounted too high: 19
Directional signage to accessible bathroom is missing: 6
Automatic door does not have standby power: 16
Raised letter and braille sign is located on hinge side of door: 12
Seat cover dispenser is located outside reach range or in other non-compliant location: 4
Side grab bar is not in correct location in stall: 34
Soap dispenser requires two hands to operate: 21
Toilet paper dispenser is not positioned properly in stall: 35
Toilet bowl or urinal rim is not at required height: 9

SIGNAGE (39)

Existing braille is not easily detectable by touch: 1
Raised letter and braille exit sign is missing: 18
Raised letter and braille sign is obstructed: 7
Raised letter and braille sign is placed where it could be obstructed by open door: 13

ELEVATOR CABS AND LOBBIES (20)

Verbal announcement is not made at each floor: 2
Five point star to indicate main level is not provided on both elevator frame jambs: 5
Audible signal does not feature the required verbal "Up" or "Down" or 1 tone for "Up" and 2 tones for "Down" to announce car arrival or response to call: 13

DOORS (16)

Door is not wide enough: 1
Door hardware requires tight grasping, pinching or twisting to operate: 4
Door closes too fast: 4
Viewing panel in door is too high: 4
Smooth surface on the "push" side of door is too high: 3

DRINKING FOUNTAINS (16)

Not enough accessible drinking fountains on floor: 1
Control to operate drinking fountain requires too much force to operate: 12
Spout at low drinking fountain is too high to reach from a seated position: 3

INTERIOR ROUTES (4)

Not enough building entrances are accessible: 1
At inaccessible pathway, there is no directional sign indicating the location of nearest accessible pathway: 2
Vending machine controls are outside reach range: 1

ALARMS (1)

Fire extinguisher is outside reach range: 1

SINGLE USER TOILET ROOMS (1)

At inaccessible bathroom, there is no directional sign to the nearest accessible bathroom: 1

258
RUSSELL

Most common barrier types:

- Multi-user restrooms
- Signage
- Drinking fountains

RUSSELL SENATE OFFICE BUILDING

We identified 258 barriers in the Russell Senate Office Building. As with Hart and Dirksen, more than 70% of these barriers were attributable to the multi-user restrooms, and the specific types of barriers in the restrooms were the same as those in Hart and Dirksen. Unique to Russell were the business and mercantile-related barriers: certain sales counters were not the required height or length. This type of barrier can be prohibitive for wheelchair and other mobility-device users attempting to make a purchase or speak to an employee at a sales counter.

The remaining barrier categories included doors, drinking fountains, elevator cabs, interior routes, signage, stairs, and storage.

RUSSELL SENATE MEMBER OFFICES

Inspectors identified four barriers in the Senate Member offices. Two concerned literature and complimentary visitor refreshments that were outside the required reach range and two concerned the lack of knee and/or toe clearance for wheelchair users at a conference room meeting table used to meet with constituents. Knee and toe clearance barriers can typically be corrected by replacing the non-compliant furniture at issue. However, reach range barriers related to non-stationary items can be easily addressed by simply moving the item to somewhere within the required range. Magazines on a literature rack, for example, can be placed on a higher or lower rung on the rack as appropriate.

RUSSELL MEMBER OFFICE BARRIERS (4)

Literature and visitor snacks are outside reach range: 2

Not enough knee and/or toe clearance at conference/meeting tables: 2

RUSSELL NON-OFFICE BARRIERS

As with the other facilities inspected during this Congress, the bulk of the Russell barriers were identified in non-office spaces. The charts below summarize the specific type and total number of non-office barriers we identified here.

MULTI-USER RESTROOMS (184)

No accessible stall in a multi-user restroom: 6

Accessible-designated stall is not deep or wide enough or is too wide: 1

Insufficient maneuvering clearance on pull side of out-swinging stall door: 4

Baby changing table is outside reach range: 2

Baby changing table clear floor space is obstructed: 1

Baby changing table is mounted 2.5" above side grab bar: 1

Coat hook is outside reach range: 2

Stall door is not self-closing: 14

Stall door maneuvering clearance is obstructed by trash can: 1

Stall door does not have a door pull: 8

Door pull is provided on pull side only: 19

Feminine product dispenser is obstructed by trash can: 2

Feminine product dispenser requires pinching to operate: 13

Clear floor space at sink is obstructed: 1

No visual alarm provided: 1

Paper towel dispenser is outside reach range: 2

Pipes are not insulated: 13

Automatic door does not have standby power: 11

Maneuvering clearance is obstructed by trash can: 2

Rear grab bar is in incorrect location in stall: 4

Mounted or other object protrudes too far out into walkway: 1

Turning space is obstructed: 2

Door threshold into restroom is too high: 1

Tactile signage is located on hinge side of door: 2

Seat cover dispenser is located outside reach range or in other non-compliant location: 14

Side grab bar is in incorrect location in stall: 20

Soap dispenser requires two hands to operate: 24

Visual alarm is mounted on ceiling: 1

Toilet bowl or urinal is not at required height: 11

SIGNAGE (39)

Existing braille is not easily detectable by touch: 29

Directional sign is positioned too high with characters that are too small to read: 1

Raised letter and braille exit or room identification sign is missing: 8

Raised letter and braille sign is obstructed: 1

DRINKING FOUNTAINS (11)

Not enough accessible drinking fountains on floor: 1
Not enough knee clearance at drinking fountain: 1
Drinking fountain protrudes too far out into walkway: 9

DOORS (8)

Door is too narrow: 1
Accessibility door closer causes door to close too fast: 1
Door closes too fast to permit entry by person in wheelchair/mobility device: 5
Threshold is too high and is not beveled appropriately: 1

INTERIOR ROUTES (4)

At inaccessible pathway, there is no directional sign to the nearest accessible pathway: 1
Queue line stanchions with retractable tape-style barriers protrude into walkway: 1
Running slope is too steep: 2

ELEVATOR CABS (5)

Verbal announcement is not made at each floor: 2
Not enough clear width at elevator door: 1
Elevator door closes too fast: 2

BUSINESS AND MERCANTILE (2)

Service counter is too high: 2

STAIRS (1)

Light fixture projects into walkway: 1

11

SENATE TUNNEL BARRIERS

Most common barrier types:

- Ramps
- Transportation

SENATE SUBWAY TUNNEL

We identified 11 barriers, which was the lowest barrier total of the Senate facilities. These barriers were grouped in the following categories: ATMs, interior routes, ramps, and transportation.

The transportation barrier category was particularly concerning. We found that there were no detectable warnings at the subway platform boarding edges.

Detectable warnings are a distinctive surface pattern of domes detectable by cane or underfoot that alert people with vision impairments that they are nearing a surface edge, street crosswalk, or hazardous dropoff.

Because the Senate subway platform boarding edges do not have platform screens or guards, detectable warnings are necessary to alert a visually impaired person that they are close to the edge. Without them, a visually impaired person could unknowingly step into an unsafe area.

As is the case with this type of barrier, accessibility issues can also cause significant safety concerns. Addressing them makes the Hill both accessible and safer to navigate for individuals with a disability.

SENATE SUBWAY TUNNEL BARRIERS

The section below indicates the specific barriers and totals in the barrier categories identified in the Senate subway tunnel.

HANDRAILS (6)

Handrail is not long enough: 1

Handrail is not provided: 1

Handrail is too low: 1

Handrails are not provided on both sides of ramp: 3

TRANSPORTATION (2)

Platform boarding edges do not have detectable warnings: 2

ATMS (1)

ATM or its controls are outside reach range: 1

RAMPS (1)

Ramp slope is too steep: 1

INTERIOR ROUTES (1)

Inaccessible entrance does not have directional signage to the nearest accessible entrance: 1

INSPECTION RESULTS BY FACILITY: HOUSE OFFICE BUILDINGS

During our House office building inspections, we surveyed the Cannon, Longworth, and Rayburn House office buildings. In total, we identified 1,187 barriers in the House facilities, which represents approximately 46% of all the 114th Congress barriers. This was just slightly higher than the barrier totals we identified in the Senate facilities. The individual facility totals were also similar to the totals we saw in the Senate facilities. There were 494 barriers identified in Rayburn, 367 barriers identified in Longworth, and 326 barriers identified in Cannon.

1,187 TOTAL BARRIERS

494 RAYBURN

367 LONGWORTH

326 CANNON

RAYBURN HOUSE OFFICE BUILDING

We identified 494 barriers in the Rayburn House Office Building. Most of these barriers were attributable to the alarms, including fire extinguisher cabinets, fire alarm pull stations, and visual alarm signals. There were 132 alarm related barriers, which is roughly 26% of the total number of Rayburn barriers.

The most common alarm issue was fire extinguisher cabinets that were positioned outside of the required reach range. Reach range refers to the maximum and minimum height that an object can be positioned above the floor.

For the fire extinguisher cabinet barriers we found in Rayburn, if the fire extinguishers are intended for public use, the barriers will need to be addressed by adjusting the height of the cabinets and/or cabinet door hardware to be within the required reach range.

If the AOC has a policy that building occupants are to immediately evacuate the building in case of a fire and does not intend for building occupants to attempt to put out a fire, then the fire extinguisher cabinets should be designated and labeled as such. If they are not for use by the public, then the barrier identified would not apply.

494

RAYBURN HOUSE OFFICE BUILDING BARRIERS

Most common barrier types

- Alarms
- Signage
- Multi-user restrooms

Other Rayburn barrier categories included ATMS, doors, drinking fountains, elevator cabs and lobbies, exterior routes, interior routes, multi-user restrooms, platform lifts, ramps, signage, stairs, storage, telephones, and transportation.

RAYBURN MEMBER OFFICE BARRIERS (67);

In Rayburn, we identified more Member office barriers than we did in other facilities – 67 in total. However, these barriers were the same types of office barriers that we saw in all the other Member offices: insufficient knee and toe clearance at meeting tables, literature or literature racks placed outside of the required reach range, and pathways into meeting spaces that were too narrow for someone in a wheelchair to pass through. We also identified barriers related to floor mat edges that could be caught in wheelchair wheels.

Clear floor space at wall mounted literature rack is obstructed: 1

Literature, rack, or storage is placed outside reach range: 45

Passage way is too narrow: 2

Floor mat edge may cause tripping: 1

Not enough knee and/or toe clearance at conference/meeting tables: 18

RAYBURN NON-OFFICE BARRIERS

Although Rayburn did have more Member office barriers than the other facilities, most of the barriers were identified in non-office spaces, as was the case in other facilities. The charts below summarize the specific type and total number of non-office barriers identified.

ALARMS (132)

Clear floor space in front of fire extinguisher or pull station control is obstructed: 1

Pull station control or fire extinguisher is outside reach range: 76

Fire extinguisher or cabinet requires grasping, twisting, or pinching to operate or cannot be easily operated with one hand: 43

Visual alarm signal is mounted on ceiling: 12

SIGNAGE (100)

Braille is damaged or is not domed or rounded: 2
Directional signage is too high with character height that is too small to see: 1
Raised letter and braille exit or other directional sign is missing: 29
Clear floor space in front of raised letter and braille signage is obstructed: 9
Raised letter and braille signage is outside reach range: 59

MULTI-USER RESTROOMS (88)

Stall hardware requires tight grasping, pinching, and/or twisting to operate: 1
Door into restroom closes too fast: 5
International Symbol of Accessibility sign is located at inaccessible toilet room: 1
Sink is too high: 1
Not enough knee clearance at sink: 10
Mirror is mounted too high: 1
Coat hook is outside reach range: 9
Stall door is not self-closing: 8
Door pull is provided on pull side only: 1
Pipes are not insulated: 8
Automatic door does not have standby power: 8
Seat cover dispenser is located outside reach range or in other non-compliant location: 3
Side grab bar is in incorrect location in stall: 3
Soap dispenser requires two hands to operate: 10
Visual alarm is mounted on ceiling: 10
Toilet bowl is obstructed by feminine product receptacle: 1
Toilet paper dispenser is in incorrect location in stall: 8

DOORS: 42

Door is too narrow: 11
Viewing panel in door is too high: 10
Door closes too fast: 9
Insufficient maneuvering clearance in front of door: 8
Push side of door does not have a smooth, uninterrupted surface or panel on bottom 10" of push side of door that extends the full width of the door at swinging door/gate: 4

INTERIOR ROUTES (18)

Emergency escape hood cabinet hardware requires tight grasping, pinching, and/or twisting to operate: 10
Mounted or other object projects too far into walkway: 5
Magnometer is not wide enough: 1
Servicemember search machine does not provide enough knee and toe clearance: 1
Vending machine controls are outside reach range: 1

DRINKING FOUNTAINS (18)

Not enough accessible drinking fountains on floor: 6
Not enough knee clearance at drinking fountain: 11
Stream height is not high enough to allow insertion of cup or glass under water: 1

STAIRS (9)

Clear floor space in front of sign is obstructed by handrail: 1
Stairway sign identifying floor level is positioned incorrectly: 8

ELEVATOR CABS AND LOBBIES: (6)

No audible signal is given or non-compliant audible signal is given: 2
No star symbol next to main entry floor number: 2
Elevator door closes too fast: 1
Raised letter and braille floor designation is not provided on both elevator jambs: 1

RAMPS (4)

Handrails are not provided: 1
Ramp landing is not provided: 2
Ramp slope is too steep: 1

PLATFORM LIFTS (3)

Standby power is not provided at platform lift that serves as part of an accessible means of egress: 1
Platform lift does not have low-energy power-operated doors or gates: 1
Clear floor space at platform lift controls is obstructed by trash can: 1

TELEPHONES (3)

Accessible phone is not provided: 1
Phone is outside reach range: 2

EXTERIOR ROUTES (2)

Cross slope is too steep: 1
Existing sidewalk and/or expansion joint has gaps that are too wide or too deep: 1

ATMS (1)

ATM symbols do not contrast from key surfaces: 1

TRANSPORTATION (1)

Platform boarding edges do not have detectable warnings: 1

367

LONGWORTH HOUSE OFFICE BUILDING BARRIERS

Most common barrier types:

- Alarms
- Signage
- Multi-user restrooms

LONGWORTH HOUSE OFFICE BUILDING

Inspectors identified 367 barriers to access in Longworth. This was roughly 30% of the total number of barriers in all the House facilities. Of the Longworth barriers, 135 were attributable to the multi-user bathrooms, which was a consistent trend in the Senate office buildings.

We also saw a significant number of barriers that were attributable to the alarms: 122 in total. The alarm barriers here were the same types of alarm barriers we saw in Rayburn, such as fire extinguisher cabinets that could only be opened by hand movements that would be difficult for a person with impaired dexterity and fire extinguishers that were outside of the required reach range. As with the fire extinguisher cabinet alarm barriers related to reach range in Rayburn, those same barriers in Longworth have to be addressed by bringing the fire extinguisher cabinets to a height within the required reach range if the fire extinguishers are intended for public use. If they are not intended for public use, the barrier can be eliminated by properly designating the intended user.

The multi-user restrooms barriers here were also the same as those identified in the other inspected facilities, such as insufficient maneuvering clearance in front of stall doorways to insufficient knee and toe clearance at bathroom sinks. Maneuvering clearance is critical for ensuring that wheelchairs users can navigate their chairs into a stall. Similarly, the appropriate amount of knee and toe clearance ensures that wheelchair users can pull up to the sink to wash and dry their hands.

LONGWORTH NON-OFFICE BARRIERS

The remaining barriers we identified were categorized as follows: ATMS, doors, drinking fountains, elevator cabs and lobbies, interior routes, ramps, signage, single user toilet rooms, stairs, and telephones.

Inspectors did not record any Member office barriers in Longworth, and the charts below pertain exclusively to non-office spaces.

MULTI-USER RESTROOMS (135)

Baby changing table is too high: 4

Insufficient clear floor space at baby changing table in accessible stall: 3

Clear floor space in accessible stall is not level: 1

Clear passageway to accessible urinal stall is too narrow due to trash can: 1

Coat hook is outside reach range: 6

Stall door is not self-closing: 18

Stall door swings into minimum required compartment area or stall clear floor space: 2

Maneuvering clearance on pull side of out-swinging stall door is insufficient: 4

Directional signage is too high with too small characters: 1

Door control clear floor space is located in door swing: 1

Door pull is not provided at all or not provided on both the pull and push side of door: 11

Door closes too fast and exceeds maximum allowed force to open: 1

Sink is too high: 1

Knee and toe clearance at sink is insufficient: 8

L-shaped or side grab bar is in incorrect location in stall: 7

Feminine product dispenser is outside reach range: 1

Mirror is mounted too high: 8

No directional signage to accessible toilet room: 4

International Symbol of Accessibility is not provided at accessible toilet room: 6

Paper towel dispenser is outside reach range: 2

Paper towel dispenser requires grasping, pinching, or twisting to operate: 10

Pipes are not insulated: 2

Automatic door does not have standby power: 4

Pull side maneuvering clearance is obstructed by trash can: 1

Raised letter and braille signage is located on hinge side of door: 1

Seat cover dispenser clear floor space is obstructed by trash can: 1

Seat cover dispenser is in incorrect location in stall: 5

Toilet is in incorrect location in stall: 3

Toilet clear floor space is obstructed by feminine product receptacle: 1

Toilet paper dispenser is in incorrect location in stall: 9

Toilet paper dispenser requires grasping when paper recedes into dispenser: 1

Visual alarm is mounted on ceiling: 1

Toilet is too low: 1

Urinal is mounted too high or does not project out far enough: 5

ALARMS (122)

Clear floor space in front of pull station control is obstructed: 1
Fire extinguisher, cabinet hardware, or pull station control is outside reach range: 118
Fire extinguisher or cabinet requires grasping, twisting, or pinching to operate or is in incorrect location in stall: 2
Visual alarm is mounted on ceiling: 1

SIGNAGE (53)

Braille is damaged: 1
Directional signage is too high with too small characters: 4
International Symbol of Accessibility is not provided at accessible entrance: 1
Raised letter and braille exit or other room identification sign is not provided: 6
Raised letter and braille characters on existing room identification signs are outside reach range: 31
Raised letter and braille signage clear floor space in front of tactile signage is obstructed by table: 2
Raised letter and braille signage is on hinge side of door: 8

SINGLE USER RESTROOMS (12)

Baby changing table clear floor space is obstructed by toilet in accessible stall: 1
Flush valve obstructs the rear grab bar: 1
No directional signage to accessible toilet room: 1
International Symbol of Accessibility is not provided at accessible toilet room: 1
Missing raised letter and braille sign identifying restroom: 1
Paper towel dispenser requires grasping, pinching, and/or twisting to operate: 1
Pipes are not insulated: 1
Seat cover dispenser obstructs grab bar: 1
Side grab bar is in incorrect location in stall: 1
Toilet paper dispenser is in incorrect location in stall: 1
Toilet clear floor space is obstructed by trash can or wooden box: 2

ELEVATOR CABS AND LOBBIES (18);

Elevator does not provide an audible and visible car position indicator: 1
Verbal announcement is not made at each floor: 7
Hall call button clear floor space is obstructed by cabinet or trash can: 3
Raised letter and braille floor designation is not provided on both elevator jambs: 2
Tactile 5-point star is not provided on both jambs at main entry level or is too small: 5

INTERIOR ROUTES (8)

Gaps in floor joints along accessible route are too wide: 1
Emergency escape hood cabinet hardware is outside reach range: 2
Directional signage is not provided at inaccessible entrance indicating location of nearest accessible entrance: 1
Queue line stanchion protrudes into walkway: 3
A two-way communication system is provided to gain admittance to a building, facility, or restricted area within a building, but it is not accessible: 1

STAIRS (7)

Raised letter and braille stairway sign is mounted over stair tread with no clear floor space to access sign: 4
Headroom clearance at stairway is less than required: 3

DOORS (5)

Door is too narrow: 1
Door closes too fast: 3
Push side maneuvering clearance in front of door is obstructed by trash can: 1

ATMS (3)

Bin for envelopes, waste, etc., is not within reach range: 1
Headphone jack is not functioning properly: 1
Symbols do not contrast from key surfaces: 1

DRINKING FOUNTAINS (2)

Fountain projects too far into walkway: 1
Not enough knee clearance at drinking fountain: 1

RAMPS (1)

Handrails are not provided on both sides: 1

TELEPHONES (1)

Accessible telephone bank is not provided on floor where there is an inaccessible telephone bank: 1

326

CANNON HOUSE OFFICE BUILDING BARRIERS

Most common barrier types:

- Alarms
- Signage
- Storage

CANNON HOUSE OFFICE BUILDING

Inspectors identified 326 barriers in the Cannon House Office Building, which was roughly 27% of all the House office building barriers. This total was the lowest of the House office building totals, though each of the buildings had a roughly similar amount. The most commonly identified barrier categories in Cannon were storage, signage, and alarms, with 85, 70, and 58 barriers in each category, respectively.

Cannon was unique in that its most common barrier category—storage—was identified within Member offices. The storage barriers related exclusively to office literature and magazine racks that were positioned outside of the required reach range, such that persons in a wheelchair or other mobility device would not be able to reach them.

Other barrier categories identified in Cannon include: ATMS, doors, drinking fountains, elevator lobbies, interior routes, multi-user restrooms, ramps, stairs, and telephones.

CANNON MEMBER OFFICE BARRIERS

There were 120 total barriers associated with Member offices in Cannon, and as noted above, storage was a common issue. The other Member office barrier categories related to doors and the interior routes or pathways in each office. Interior route barriers include barriers that inhibit maneuvering from one place in an office to the next, such as having a too narrow or obstructed pathway from the office reception area into the designated meeting space. If a pathway is too narrow or obstructed by office furniture, a person in a wheelchair may not be able to proceed into the meeting area.

CANNON MEMBER OFFICE BARRIERS (120)

STORAGE (85)

Magazine rack and literature are outside reach range: 85

INTERIOR ROUTES (34)

Area rug or floor mat edges easily curl or are curling and frayed and pose a tripping hazard: 3

Floor mat is not slip resistant: 1

Clear floor space at reception desk is obstructed by rocking chairs: 1

Clear floor space at snacks is obstructed by coffee table and chairs: 1

Accessible route to public space in office is too narrow due to position of chair and coat rack: 1

Computer, i-pad, or other sign-in is too high or outside reach range: 3

Knee or toe clearance at meeting table or desk is insufficient: 20

Water cooler cups are outside reach range: 4

DOORS (1)

Maneuvering clearance at door is insufficient: 1

CANNON NON-OFFICE BARRIERS (206);

There were a total of 206 barriers identified in non-Member office spaces in Cannon. The charts below show the specific types and categories of these non-office space barriers.

ALARMS (58)

Pull station control or fire extinguisher is outside reach range: 34

Fire extinguisher or cabinet requires grasping, twisting, or pinching to operate: 20

Visual alarm is mounted on ceiling: 1

Pull station clear floor space is obstructed by cabinet: 3

SIGNAGE (70)

Directional signage is too high with too small characters: 1

Raised letter and braille sign is too high: 22

No raised letter and braille exit sign: 25

Raised letter and braille signage clear floor space is obstructed by rack or table: 2

Raised letter and braille signage is on hinge side of door: 20

MULTI-USER RESTROOMS (23)

Coat hook is outside reach range: 1

Coat hook is not provided in accessible stall but is provided in other stalls: 1

Stall door is not self-closing: 1

Stall door is too narrow: 1

Directional signage is too high with too small characters: 1

Door pull is only provided on one side of the door: 3

Door closes too fast or requires too much force to open: 1

Knee clearance at sink is insufficient: 1

Mirror is mounted too high: 1

Paper towel dispenser requires grasping, pinching, and/or twisting to operate: 3

Insufficient maneuvering clearance at stall door: 1

Maneuvering clearance at sanitary product vending machine is insufficient: 1

Seat cover dispenser is located outside reach range: 1

Shelf in stall is mounted too high: 1

Side grab bar is in incorrect location in stall: 3

Toilet paper dispenser is in incorrect location in stall: 2

STAIRS (19)

Floor number is not identified with raised letter and braille signage: 5
Stairway sign identifying floor level is incorrectly located: 3
Headroom clearance at stairway is less than required: 4
Stairway sign indicating floor level is in incorrect location: 7

DOORS (12)

Viewing panel in door is too high: 5
Maneuvering clearance in front of door is less than required: 7

INTERIOR ROUTES (8)

Accessible seating is not provided at dining counter or tables in food service area: 1
No directional signage at inaccessible means of egress indicating location of nearest accessible means of egress: 4
Queue line tape stanchion protrudes into walkway: 1
Passage way between wall and stanchion is too narrow: 1
Vending machine controls are outside reach range: 1

DRINKING FOUNTAINS (6)

Not enough accessible drinking fountains per floor: 6

ELEVATOR LOBBIES (4)

Audible signal for “Down” is not functioning properly: 2
Tactile 5 point star is not provided on both elevator jambs: 2

RAMPS (4)

Handrail is not provided: 1
Ramp slope is too steep: 2
Gap between ramp joints is too wide or deep: 1

ATMS (1)

Symbols do not contrast from key surfaces: 1

TELEPHONES (1)

Pay telephone is outside reach range: 1

FACILITY SPOTLIGHT: ; U.S. BOTANIC GARDEN

As a public museum, the Botanic Garden is unique among the other campus facilities that we inspect because it is primarily a public-facing building. Established in 1830, the Botanic Garden serves to inform visitors about the importance of plants to the well-being of humans and to the earth's ecosystem.[4] It is one of the oldest botanic gardens in North America, and is administered by the Architect of the Capitol. The Botanic Garden is also the first interior space that we inspected under our current ADA inspection program.

Given its focus on serving the public, the need to identify any barriers to access here was critical. Against this backdrop, the comparatively low number of barriers identified at the Botanic Garden, 63 in total, was a promising finding.

63

BOTANIC GARDEN BARRIERS

[4] *https://www.usbg.gov/about-us*

Most of these barriers, 42 of the 63, were related to the curb ramps and exterior routes adjacent to and leading up to the facility. This is key because being able to actually get into a building in the first place is an essential aspect of accessibility.

Barriers along the path leading into a building can deter people with disabilities from entering the building. This is especially true on the Hill where limited parking and the physical campus layout make it more likely that people have to travel longer distances from their transportation and use sidewalks to access the building.

We also saw a number of barriers related to the interior pathways within the building, including too steep slopes and gaps within the facility flooring, both of which can make it difficult for wheelchair and other mobility device users to navigate the museum.

The total number of barriers in each identified category along with a complete list of the specific barriers identified are listed in the section below.

CURB RAMPS (31)

Counter slope of adjoining gutters or road surfaces immediately adjacent to curb ramp or accessible route is too steep: 7

Cross slope of existing curb ramp is too steep: 1

Curb ramp landing is not designed to prevent accumulation of water: 2

Curb ramp or blended transition or pedestrian refuge island in public right-of-way does not have detectable warnings: 6

Curb ramp surface contains cracks, expansion joints and/or vertical transition: 9

Detectable warning in public right-of-way is deteriorated or damaged: 1

Existing curb ramp is not at the same level with sidewalk, gutter and/or street: 1

Existing diagonal, or corner-type, curb ramp does not have the required minimum clearance at bottom located within marked crossing: 1

Slope of existing curb ramp side flares too steep and/or flared sides are part of the accessible route: 1

Slope of upper landing at curb ramp is too steep: 2

DRINKING FOUNTAINS (1)

Knee and/or toe clearance at drinking fountain is insufficient: 1

ELEVATOR CABS AND LOBBIES (2)

Automatic verbal announcement is not made at each floor: 1
Tactile 5 point star is not provided on both jambs at main entry level, or is provided and is too small: 1

EXTERIOR ROUTES (11)

Cross slope of accessible exterior route (perpendicular to the direction of travel) is too steep: 5
Existing sidewalk and/or expansion joint has gaps that are too wide or too deep: 4
Transition points between parts of accessible paths of differing heights are too high, or do not have beveling, or are too steep: 2

INTERIOR ROUTES (12)

Cross slope of accessible interior route is too steep: 3
Existing floor and/or expansion joint has gaps that are too wide in direction of travel: 5
Transition points between parts of accessible paths of differing heights are too high, or do not have beveling, or are too steep: 3
Plants, trees or shrubbery protrude too far into required passageway: 1

RAMPS (6)

Edge protection is not provided at each side of ramp and landings: 1
Handrails are not provided: 1
Intermediate landing at direction change is too small: 1
Ramp slope is too steep: 2
Ramp surface contains cracks, expansion joints, gaps, and/or vertical transition: 1

BOTANIC GARDEN AND PROGRAM ACCESSIBILITY

While we have historically focused on physical accessibility in campus facilities during our ADA biennial inspections, it is important to note that the Botanic Garden offers a number of resources and services to enhance its program accessibility. Program accessibility refers to whether an entities' services, activities, and programs are readily accessible to and usable by people with disabilities. For facilities like museums, enhancing program accessibility means, among other things, making sure that individuals with disabilities have equal access to the Botanic Garden, including its exhibits and other offerings.

One of the Botanic Garden's program access initiatives is "Morning at the Museum," which provides children on the autism spectrum with a sensory-friendly way to experience current exhibits.

The Botanic Garden also offers a number of other on-site resources, including assisted listening devices, a cell-phone accessible audio tour, wheelchairs, sign language interpretation, and tactile signage, which uses raised surfaces to convey non-textual information like maps, paintings, graphs, and diagrams to individuals with vision-related disabilities.

In addition to its own programming, the Botanic Garden also supports third party community organizations serving individuals with disabilities by providing space for accessible programming. A horticultural therapy group for active military with traumatic brain injuries meets at the facility monthly for its services. An adult day support group for individuals with cognitive developmental disabilities and a program for deaf senior citizens also meets regularly at the Botanic Garden.

Other legislative branch facilities are also making programmatic access strides like the Botanic Garden. The CVC, for example, hosts a "Morning at the Museum" program for individuals with sensory processing disorders similar to that offered by the Botanic Garden, and the LOC also provides tactile building tours for individuals with vision impairments.

Our inspectors surveyed both the CVC and the LOC facilities in our 115th Congress inspection cycle, and more about the programmatic access efforts of these facilities, as well as the results of our inspections, will be published in the 115th Congress biennial ADA inspection report.

PROGRESS UPDATES FROM THE AOC

At the beginning of each year, the AOC updates the OGC on its progress with removing identified barriers and improving accessibility in Capitol complex facilities and grounds. The AOC utilizes a third-party consultant to verify that accessibility barriers have been remediated. Based on the status of this verification process as of the AOC's 2019 update, the AOC reports that it has closed accessibility barriers within its responsibility identified in the 111th, 112th, 113th, and 114th Congress as follows:

- 111th Congress: 91% closed
- 112th Congress: 94% closed
- 113th Congress: 30% closed
- 114th Congress: 53% closed

Some of the AOC's most significant accessibility improvements during the 114th Congress include:

- Updating the websites of the CVC and the Botanic Garden for enhanced accessibility;
- Remodeling the gift shop in the Dirksen Senate Office Building to provide accessible paths, displays, and an accessible sales counter;
- Completing interior accessibility upgrades to committee hearing rooms in the Rayburn House Office Building, including installing automatic door operators and creating accessible means of egress;
- Creating a temporary accessible entrance on C Street SE for the Cannon House Office Building for use during the Cannon renewal project;
- Completing installation of emergency evacuation wheelchairs in the O'Neill House Office Building;
- Providing tactile artifacts to the LOC for inclusion in the "Touch History" Jefferson Building tour utilized by visitors with vision impairments.

A copy of the AOC's 2019 progress update summary is included with this Report as Appendix I. We also received updates on barrier removal progress in Member offices from the Office of House Employment Counsel and the Office of Senate Chief Counsel for Employment. These updates are attached as Appendices II and III.

PARTNERS IN ACHIEVING ACCESSIBILITY

While the need for additional improvement remains, much of the accessibility progress we have seen to date on the Hill can be attributed to the collaborative efforts of the AOC. The AOC takes the approach that providing accessibility to the Capitol complex is a common goal and interacts with our office as partners in reaching that objective. When we identify barriers, the AOC joins in our commitment to improve accessibility on the Hill by quickly developing a strategy to address identified barriers. One of the AOC's most effective strategies has been including staff members who are directly responsible for office configuration and furniture fabrication in the inspection process. Doing so helps everyone involved to better understand why compliance with the ADA standards makes the Hill more accessible to all.

A key contributor in this process has been Ben Scavone, the AOC's Universal Accessibility Coordinator. In this capacity, Ben is responsible for facilitating the greatest feasible level of accessibility throughout the Capitol complex to all persons regardless of their disability.

Ben has been instrumental in coordinating AOC department efforts to comply with the ADA standards and in communicating with our office openly about challenges and successes in moving forward. The OCWR highlighted more about Ben's experiences in championing accessibility progress on the Hill in the July 2017 OOC Compliance@Work publication.

Ben Scavone (Left) pictured with Evan Terry Associates ADA specialist

BARRIER REMOVAL COSTS

While the OGC has not received cost estimates from the AOC, the software used for conducting the inspections and developing solutions generates rough estimates of the costs associated with each solution after adjusting for construction costs in the D.C. area and the higher costs associated with government construction work.

Based on these estimates, the total cost for correcting all the barriers found during the 114th Congress totals approximately $5.5 million.

TRANSITION PLANS

The regulations implementing the ADA require that government offices survey their public facilities to identify existing barriers and then, after consulting with members of the disability community, develop transition plans that will determine how and when the barriers will be removed and how the facilities will otherwise be made readily accessible for people with disabilities. See 28 C.F.R. § 35.150(d).

Our approach to ADA inspections encourages consultation with the disability community and the development of thorough and effective transition plans. The information we provide to employing offices regarding barrier severity and estimated solution costs aids the transition planning process, as employing offices can utilize this data to prioritize abatement projects.

INVESTIGATION OF CHARGES OF DISCRIMINATION

During the 114th Congress, the OGC received one ADA request for inspection, which concerned wheelchair and scooter access to the west front grounds of the Capitol during a summer concert in 2015. The employing office in this matter fully cooperated with our office and removed the access barriers. Additionally, this request prompted the employing office to proactively consult with our office during the planning stages for future concert events to ensure accessibility. The OGC did not file a complaint in this case.

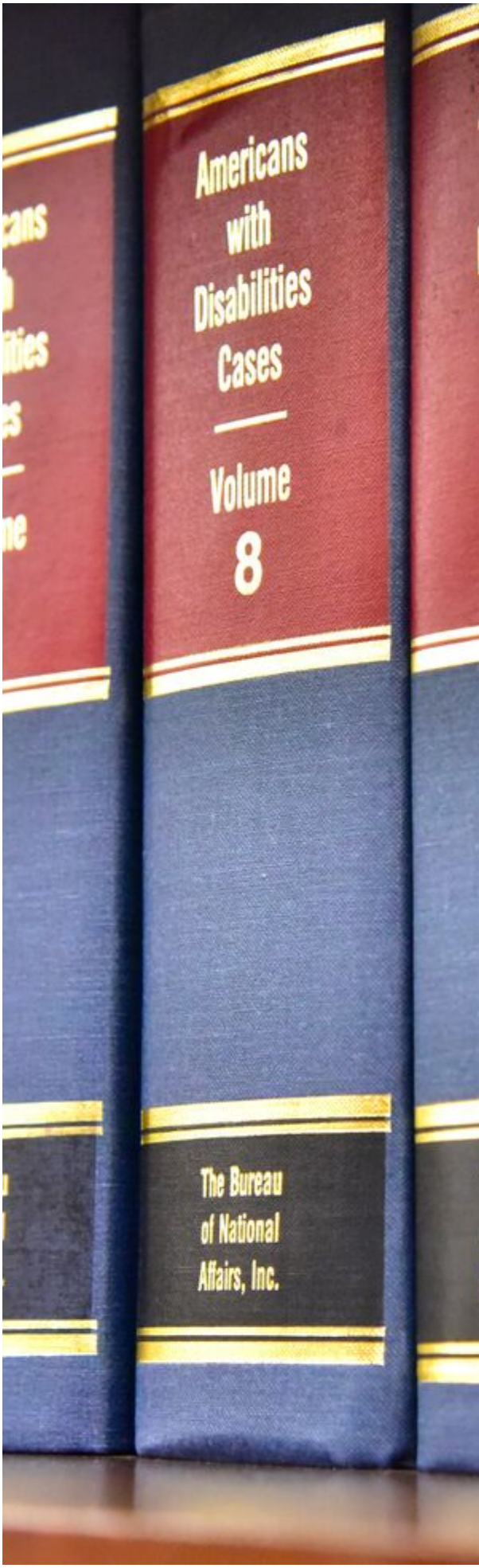

ACKNOWLEDGEMENTS

The OGC ADA inspection team during the 114th Congress was comprised of Shonda Perkins, Senior Occupational Safety and Health Specialist and OSH Inspection Coordinator; Christina Bailey, Occupational Health and Safety Specialist; Brent Dittman, Occupational Health and Safety Specialist; Sara Hoover, Occupational Health and Safety Specialist; and Kaylan Dunlap, Accessibility Specialist with Evan Terry Associates (ETA). Additional inspection assistance was provided by Thomas Seymour, Fire Protection Engineer.

The OGC appreciates the cooperation of all legislative branch offices during the inspection process. We particularly appreciate the assistance and time given by the employees of the AOC, the Office of House Employment Counsel, and the Office of Senate Chief Counsel for Employment. Simone Jenkins, OGC Staff Attorney, is the primary author of this Report.

The OGC also acknowledges the invaluable assistance provided by ETA. The OGC would not have been able to implement the barrier removal survey approach to ADA inspections without ETA's assistance and software.

JOHN D. UELMEN
General Counsel

APPENDIX I

AOC 2019 PROGRESS UPDATE SUMMARY

Office of Congressional Workplace Rights

ARCHITECT OF THE CAPITOL

Safety, Fire, and Environmental Programs Office
Ford House Office Building, Room H2-571
Washington, DC 20515

www.aoc.gov

January 31, 2019

Mr. John D. Uelmen
General Counsel
Office of Congressional Workplace Rights
110 Second Street, SE
Room LA-200, John Adams Building
Washington, D.C. 20540-1999

Dear Mr. Uelmen:

The Architect of the Capitol (AOC) is pleased to provide this annual progress report with data for the calendar year ending December 31, 2018, on removing the accessibility barriers identified in the biennial reports for the 111th, 112th, 113th and 114th Congress.

Enclosure 1 provides a summary and detailed description of our progress. I am pleased to report the following progress:

- 91 percent (207 of 228) of the 111th Congress findings are closed
- 94 percent (373 of 398) of the 112th Congress findings are closed
- 30 percent (51 of 168) of the 113th Congress findings are closed. We are currently working to develop engineered solutions for the balance of these accessibility barriers. Our design is nearing completion and we will be seeking funding options and possible start of construction during Fiscal Year 19
- 53 percent (1,261 of 2,383) of the 114th Congress findings are closed

The open findings for each Congressional Report are identified by the following categories:

- 111th Congress
  - Planned as part of the Cannon Renewal project, Phase 4 exterior sidewalk repairs – 7 percent (16 of 228 findings)
  - Planned, engineered solutions are being developed – <1 percent (1 of 228 findings)
  - Located off the identified Accessible Path, engineered solutions to be developed – 2 percent (4 of 228 findings)
- 112th Congress
  - Planned, but not yet completed – <1 percent (3 of 398 findings)
  - Planned, engineered solutions are being developed – 5 percent (22 of 398 findings)
- 113th Congress
  - Planned, engineered solutions are being developed – 70 percent (117 of 168 findings)

- 114th Congress
  - Planned as part of the Cannon Renewal project – 5 percent (103 of 2,383 findings)
  - Planned, engineered solutions are being developed – 43 percent (1,019 of 2,383 findings)

Our process includes verification of closed findings by a third party consultant. The current status of the verification process is:

- 111th Congress
  - Verified / confirmed closed – 89 percent (204 of 228 findings)
- 112th Congress
  - Verified / confirmed closed – 94 percent (373 of 398 findings)
- 113th Congress
  - Verified / confirmed closed – 20 percent (33 of 168 findings)
- 114th Congress
  - Verified / confirmed closed – 10 percent (243 of 2,383 findings)

Enclosure 2 is a detailed electronic spreadsheet listing each finding and our progress in remediating 111th, 112th, 113th and 114th Congress Report of Findings. This enclosure also contains the verification reports from our third party consultant for 2018. Please note, we will continue to obtain abatement verification reports and photos throughout 2019.

Enclosure 3 contains a complete list of Americans with Disabilities Act (ADA) accomplishments completed by the AOC. Some accomplishment highlights include:

Physical Access

- Continued improvement to the physical accessibility of the Capitol campus such as installation and/or renovation of ramps, sidewalks, and curb cuts
- Installation of temporary access ramps for use during the U.S. Botanic Garden Holiday Exhibit to ensure both visitors waiting in line and others had an accessible path to the center of the entrance terrace
- Designing a sloped walkway to create a second accessible entrance to the Dirksen Senate Office Building along C Street NE
- Designing a project to replace the wheelchair stair lift with a vertical lift in the Rayburn House Office Building Independence Avenue entrance

Program Access

- The U.S. Capitol Visitor Center and the Botanic Garden, for the third year, continues to provide *'Morning at the Museum'* programs for family members with autism or sensory processing disabilities
- The AOC Library Buildings and Grounds and Library of Congress staff are collaborating and incorporating ADA/accessibility education into their joint staff meetings to improve accessibility during the design and construction of exhibits

Program Management

- Held quarterly Universal Accessibility Team meetings with attendance from all jurisdictions, major divisions and the Office of Congressional Accessibility Services
- Continued to improve our internal processes to ensure accessibility standards are met on design and construction projects. Additionally, the AOC continues to work with an independent quality assurance/quality control inspector who is confirming completed work is ADA compliant
- Provide training for all staff, including architects, engineers, daytime and overnight Construction Division staff, on the accessibility regulations and common construction issues

Collaboration with the Office of Congressional Workplace Rights, Office of General Counsel

- Continued to work cooperatively with you and your staff on your ADA inspections
- Provided feedback to your staff on the final 115th Congress Report (i.e. closing of Safe Harbor findings, review process for contested findings and discrepancies in information contained in the report)
- Working with your staff on ADA cases, as they arise

Should you have any further questions or comments, please contact Ben Scavone at 202.226.3058 or myself at 202.226.0630.

Sincerely,

Patricia Williams

Patricia Williams, CSP
Director of Safety, Fire and Environmental Programs

Enclosure 1: 2018-12-28 OOC Status.pdf
Verification reports: Report of Interior ADA Barrier Third Party Verification 3-5-18.pdf, Report of Interior ADA Verification 5-11-18.pdf
Enclosure 2: 111th Congress Consolidated Findings 2019.xlsx, 112th Congress Consolidated Findings 2019.xlsx, 113th Congress Consolidated Findings 2019.xlsx, 114th Congress Consolidated Findings 2019.xlsx
Enclosure 3: 2019 Annual Significant Achievements.pdf

APPENDIX II

HOUSE MEMBER OFFICE BARRIER REMOVAL PROGRESS SUMMARY

Office of Congressional Workplace Rights

GLORIA J. LETT
COUNSEL

ANN R. ROGERS
DEPUTY COUNSEL

U.S. House of Representatives
Office of House Employment Counsel

4300 O'NEILL FEDERAL BUILDING
WASHINGTON, DC 20515–6622

PHONE: (202) 225–7075
FAX: (202) 225–7033

KIMBERLY C. WILLIAMS
RUSSELL H. GORE
MARK S. HAYES
SENIOR ASSOCIATE COUNSELS

JOEL J. BOROVSKY
ASSOCIATE COUNSEL

March 12, 2019

Via Electronic Mail
Simone Jenkins
Staff Attorney
Office of the General Counsel
Office of Congressional Workplace Rights
Room LA 200
110 Second Street, S.E.
Washington, D.C. 20540

Re: Office of Congressional Work Place Rights Draft Report on the ADA Inspection Findings for the 114th Congress

Dear Ms. Jenkins:

Thank you for the opportunity to summarize and supplement our submissions of February 8 and March 16, 2018, regarding the Office of Congressional Workplace Rights' findings from its ADA Inspections of House Member Offices for the 114th Congress. As you know, the charts we submitted in our March 16, 2018 submission detail those findings that had been abated as of that date. The charts also noted where a finding was in an office that moved between the date of the inspection and the conclusion of the 114th Congress, or that was vacated as a result of the Cannon Renewal Project.

In addition, and by way of updating our earlier submissions, the following findings are for office spaces that moved and/or were renovated at the conclusion of the 115th Congress: 3725, 3757, 3759, 3763, 3779, 3785, 3786, 3787, 3803, 3806, 3813, 3865, 3868, 3869, 3880, 3930.

Finally, as we mentioned in our March 16, 2018 submission, there are several findings that we believe require both short and long-term solutions. We continue to work with representatives of the Office of the Chief Administrative Officer and the Architect of the Capitol's Office to address these solution(s). In addition, we remain grateful for your office's time and input regarding our proposed efforts in this regard and we look forward to follow-up conversations.

As always, we remain committed to working with the Office of Congressional Workplace Rights to ensure that the employing offices of the House of Representatives remain safe and accessible to employees and visitors to the Capitol Complex. Please let me know if you have any questions or if we can provide any further information.

Sincerely,

Ann R. Rogers
Acting Counsel

HOB Members' Office Inspection
114th Congress Periodic ADA Inspection Findings
Employing Office - OHEC
ABATEMENT RESPONSE
CANNON HOUSE OFFICE BUILDING

OOC'S "Short Barrier Number"	**Detailed description of abatement action to include date of completion and method of abatement OR update on proposed abatement actions with estimated date of completion**	**Other Comments**
3725	OHEC is working with CAO and/or AOC representatives to develop long-term solutions to address not readily achievable issues with furniture clearance, reach ranges, and other structural issues within Member office spaces.	
3727	Office moved as of December 31, 2016.	
3730	Office moved as of December 31, 2016.	
3732	OHEC is working with CAO and/or AOC representatives to develop long-term solutions to address not readily achievable issues with furniture clearance, reach ranges, and other structural issues within Member office spaces.	
3737	Office moved as of December 31, 2016.	
3738	Office is currently unoccupied.	
3739	Office is currently unoccupied.	
3744	Office moved as of December 31, 2016.	
3750	Abated as of March 1, 2018.	Items offered to public on the table between the rocking chairs have been moved to an alternate location to allow access.
3757	OHEC is working with CAO and/or AOC representatives to develop long-term solutions to address not readily achievable issues with furniture clearance, reach ranges, and other structural issues within Member office spaces.	
3759	OHEC is working with CAO and/or AOC representatives to develop long-term solutions to address not readily achievable issues with furniture clearance, reach ranges, and other structural issues within Member office spaces.	
3761	Office moved as of December 31, 2016.	

3763	OHEC is working with CAO and/or AOC representatives to develop long-term solutions to address not readily achievable issues with furniture clearance, reach ranges, and other structural issues within Member office spaces.	
3766	Office is currently unoccupied.	
3770	Office is currently unoccupied.	
3779	OHEC is working with CAO and/or AOC representatives to develop long-term solutions to address not readily achievable issues with furniture clearance, reach ranges, and other structural issues within Member office spaces.	
3784	Office moved as of December 31, 2016.	
3785	OHEC is working with CAO and/or AOC representatives to develop long-term solutions to address not readily achievable issues with furniture clearance, reach ranges, and other structural issues within Member office spaces.	
3786	OHEC is working with CAO and/or AOC representatives to develop long-term solutions to address not readily achievable issues with furniture clearance, reach ranges, and other structural issues within Member office spaces.	
3787	OHEC is working with CAO and/or AOC representatives to develop long-term solutions to address not readily achievable issues with furniture clearance, reach ranges, and other structural issues within Member office spaces.	
3788	Office is currently unoccupied.	
3789	Office is currently unoccupied.	
3790	Office is currently unoccupied.	
3791	Office moved as of December 31, 2016.	
3827	Office moved as of December 31, 2016.	
3798	Office moved as of December 31, 2016.	
3801	Office moved as of December 31, 2016.	
3802	Abated as of March 6, 2018.	Water cooler cups moved to location within reach range.
3803	OHEC is working with CAO and/or AOC representatives to develop long-term solutions to address not readily achievable issues with furniture clearance, reach ranges, and other structural issues within Member office spaces.	
3804	Abated as of March 6, 2018.	Water cooler cups moved to location within reach range.
3805	Abated as of September 2016.	Water cooler cups moved to location within reach range.

3806	OHEC is working with CAO and/or AOC representatives to develop long-term solutions to address not readily achievable issues with furniture clearance, reach ranges, and other structural issues within Member office spaces.	
3807	Office is currently unoccupied.	
3808	Office is currently unoccupied.	
3809	Office moved as of December 31, 2016.	
3810	Office moved as of December 31, 2016.	
3811	Office moved as of December 31, 2016.	
3812	Office moved as of December 31, 2016.	
3813	OHEC is working with CAO and/or AOC representatives to develop long-term solutions to address not readily achievable issues with furniture clearance, reach ranges, and other structural issues within Member office spaces.	
3814	Office moved as of December 31, 2016.	

HOB Members' Office Inspection
114th Congress Periodic ADA Inspection Findings
Employing Office - OHEC
ABATEMENT RESPONSE
RAYBURN HOUSE OFFICE BUILDING

OOC'S "Short Barrier Number"	**Detailed description of abatement action to include date of completion and method of abatement OR update on proposed abatement actions with estimated date of completion**	**Other Comments**
3864	Abated as of March 13, 2018.	Controls in place to move chair and/or arrange for alternate meeting location.
3865	OHEC is working with CAO and/or AOC representatives to develop long-term solutions to address not readily achievable issues with furniture clearance, reach ranges, and other structural issues within Member office spaces.	
3866	Office moved as of December 31, 2016.	
3867	Office moved as of December 31, 2016.	
3868	OHEC is working with CAO and/or AOC representatives to develop long-term solutions to address not readily achievable issues with furniture clearance, reach ranges, and other structural issues within Member office spaces.	
3869	Abatement in progress.	
3872	Office moved as of December 31, 2016.	
3875	Office moved as of December 31, 2016.	
3878	Office moved as of December 31, 2016.	
3880	OHEC is working with CAO and/or AOC representatives to develop long-term solutions to address not readily achievable issues with furniture clearance, reach ranges, and other structural issues within Member office spaces.	
3921	Office moved as of December 31, 2016.	
3926	OHEC is working with CAO and/or AOC representatives to develop long-term solutions to address not readily achievable issues with furniture	

	clearance, reach ranges, and other structural issues within Member office spaces.	
3928	Office moved as of December 31, 2016.	
3930	Abatement in progress.	
3932	Office moved as of December 31, 2016.	
3935	OHEC is working with CAO and/or AOC representatives to develop long-term solutions to address not readily achievable issues with furniture clearance, reach ranges, and other structural issues within Member office spaces.	
3939	Office moved as of December 31, 2016.	
3940	Office moved as of December 31, 2016.	
3995	Office moved as of December 31, 2016.	

APPENDIX III

SENATE MEMBER OFFICE BARRIER REMOVAL PROGRESS SUMMARY

Office of Congressional Workplace Rights

JULIE E. ADAMS
SECRETARY

United States Senate

OFFICE OF THE
SENATE CHIEF COUNSEL FOR EMPLOYMENT
P.O. BOX 77053
WASHINGTON, DC 20013
(202) 224–5424

CLAUDIA A. KOSTEL
SENATE CHIEF COUNSEL FOR EMPLOYMENT

ERICA A. WATKINS
DEPUTY CHIEF COUNSEL FOR EMPLOYMENT

ANN S. ROBINSON
CHRISTOPHER CALSYN
SENATE SENIOR COUNSEL FOR EMPLOYMENT

NEIL MANZULLO
ANDREA GOPLERUD
SENATE COUNSEL FOR EMPLOYMENT

FAX: (202) 228–2557
TDD/TTY: (202) 224–1240

August 30, 2017

BY FACSIMILE AND E-MAIL

Mr. John Uelmen
General Counsel
Office of Compliance
Room LA 200 Adams Building
110 Second Street, SE
Washington, DC 20540-1999

Re: Responses to Barriers Found During 114th Congress Biennial ADA Inspection of Senate Member Offices

Dear Mr. Uelmen:

At the May 1, 2017 closing conference for the 114th Congress Americans with Disabilities Act ("ADA") Biennial Inspections, you issued a report that included a number of potential access barriers in Senate employing offices. Although specific responses to these barriers are not required, you offered the employing offices represented at that conference the chance to respond to the potential barriers found during the inspections. Responses from a number of Senate Member Offices are included below. Since specific responses were not required and since some of the employing offices in which barriers were found have now ceased to exist, the list below does not include a response to each barrier that your inspectors found.

Room #	***Barrier Identified in Report***	***Response from Office***
SH-133	Toe clearance at work surface of small conference table is less than required.	A compliant table is available, and the barrier has been removed.
SH-331	Clear width of accessible route to literature racks is less than required.	The office has requested furniture from the Architect of the Capitol that will remove the barrier.
SR-437[1]	Portions of the literature rack were beyond the applicable reach ranges.	The non-compliant furniture was removed by the Architect of the Capitol, and the barrier has been removed.

[1] On the report, this barrier was listed as being assigned to office SR-430. The correct office is SR-437.

SR-454	Basket with snacks located outside of reach range.	The basket has been relocated to an area within the reach range, and the barrier has been removed.
SR-482	Toe clearance for a conference room table was less than required.	The office reviewed the room, the furniture in the room, and the OOC's suggestion for removing the barrier, and took steps to accommodate visitors with disabilities.

If you have any questions, please do not hesitate to contact our office. We look forward to working with you to promote a safer workplace.

Sincerely,

Neil Manzullo

Office of Congressional Workplace Rights